SCHEFFKNECHT

PICK & CARRY KRAN

PCS 160
TECHNISCHE DATEN

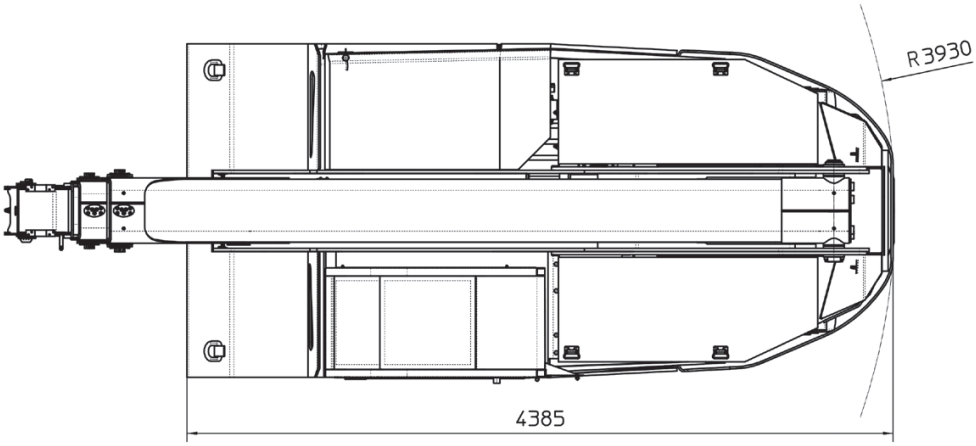
R 3930
4385

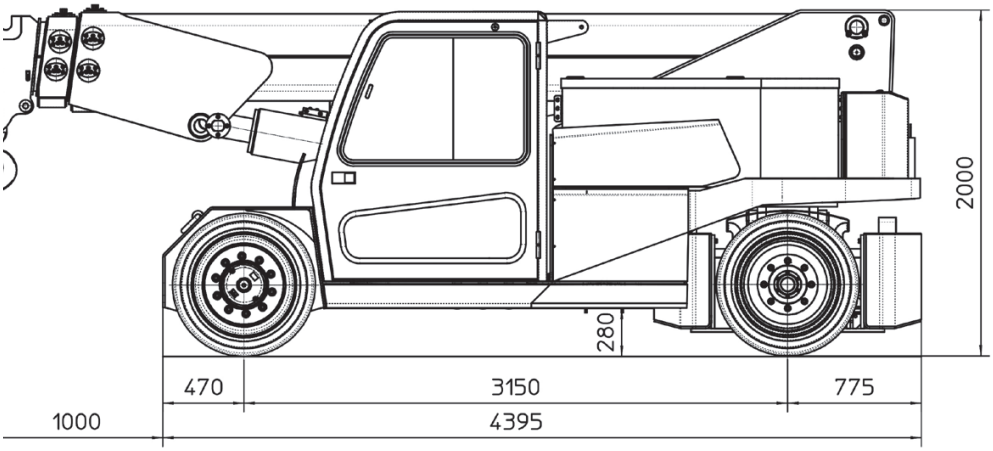
2000
280
470
3150
775
1000
4395

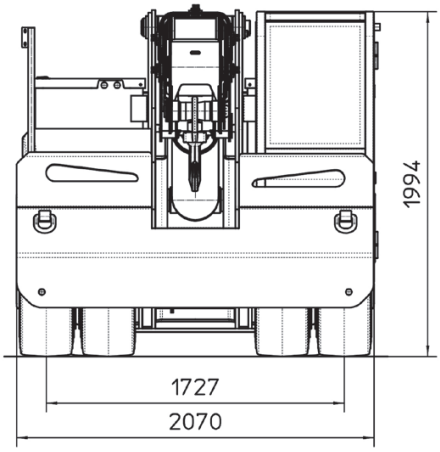
1994
1727
2070

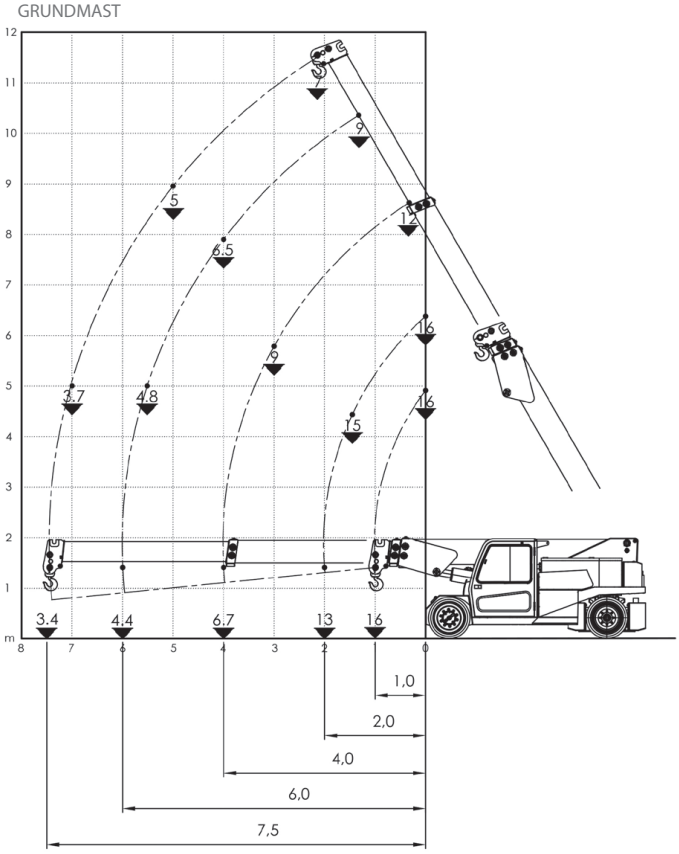
GRUNDMAST
12
11
10
9
8
7
6
5
4
3
2
1
m
8
7
6
5
4
3
2
0
7
9
5
12
6.5
16
9
3.7
4.8
16
15
3.4
4.4
6.7
13
16
1.0
2.0
4.0
6.0
7.5